CLEVERTOUCH®
by Boxlight®

clevertouch.com

CL Pro Series

The All-in-One Commercial Display for Digital Signage and Meeting Rooms

With built-in digital signage for seamless content management and real-time alerts, and screen-sharing capabilities for enhanced meeting collaboration, the CL Pro Series is the ultimate all-in-one display solution.

NEW

Slimline bezel from 9.9mm

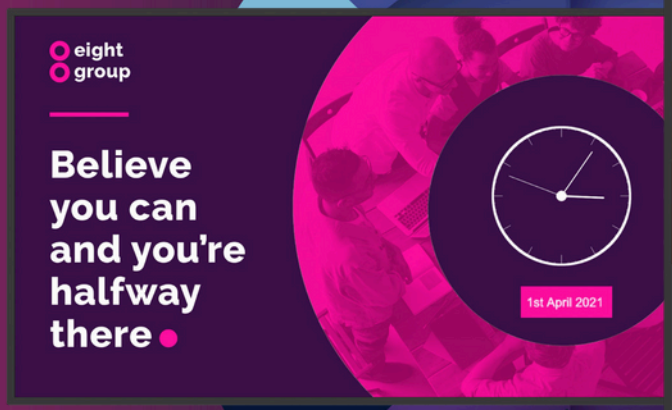

Dual Display Orientation
inboth landscape and portrait to suit your needs.

1-year MDM* included
Remote access to manage, view and support your display for the ultimate in control and flexibility.

Screen Sustainability Scheduling
forreducedpower consumption

CLEVER® LIVE

Embedded Digital Signage, subscription free.

Create your account today at **cleverlive.com**

CLEVERSHARE®

Connect and share any device in an instant with the free to download CleverShare App.

The description, illustrations, etc. on this document may be subject to change in accordance with the latest product specification and performance.

allOffice | FutureVisuals

Key Features

Ultra HD Resolution

Vibrant Picture Quality

16/7 Operation

QR Code interactive functionality

One Touch Messaging & Broadcasting

Screen Sustainability Scheduling Power Management

Screen share up to 9

Control Integration

Capable of full, multi zoned digital signage, no additional media player required.

Android Technology

MDM Built-in Management Control

OTA Updates & Cloud Accounts

Upgrade your solution

Add an **OPS** or **Video Conferencing Bar** to create a Microsoft Teams Room or Zoom Room environment.
*OPS not applicable with CL Pro 43" and 55"

partnered with

CL Pro Series Specifications

Display

Screen size	43” 4K, 55” 4K, 65” 4K, 75” 4K, 86” 4K, 98” 4K
Screen type	43”: VA - Direct LED Backlight 55”: VA - Direct LED Backlight 65”: ADS - Direct LED Backlight 75”: ADS - Direct LED Backlight 86”: ADS - Direct LED Backlight 98”: ADS - Direct LED Backlight
Aspect Ratio	16:9
Display Colours	1.07 Billion (10 bit)
Resolution	4K UHD (3840x2160 @60Hz)
Response Time	43”: 6.5ms 55”: 6.5ms 65”: 8ms 75”: 8ms 86”: 8ms 98”: 8ms
Refresh Rate	60Hz
LCD Viewing Angle	178°
Brightness	43”: 450 cd/m2 55”: 450 cd/m2 65”: 450 cd/m2 75”: 450 cd/m2 86”: 450 cd/m2 98”: 500 cd/m2
Contrast Ratio	43”: 5000:1 55”: 4000:1 65”: 1200:1 75”: 1200:1 86”: 1200:1 98”: 1200:1
DC Dimming (for Flicker Free)	Yes
Main Board	982
Life of Screen	50,000 Hours
NTSC	72%

Connectivity

OPS Slot	43”: No 55”: No 65”: Yes 75”: Yes 86”: Yes 98”: Yes
HDMI-In	43”: 2 55”: 2 65”: 3 75”: 3 86”: 3 98”: 3
HDMI-Out	x1
USB-A 2.0	x1
USB A 3.0 (faster data transfer)	x1
USB C (Video, Audio & Touch)	1 x USB Side Type C with video, audio, 65W PD and network sharing
LAN In (RJ45)	x1
LAN OUT	43”: No 55”: No 65”: Yes 75”: Yes 86”: Yes 98”: Yes
RS-232	x1
Wake-on-Lan	Yes
WirelessAdapter 2.0 + WAP	Yes
Clevertouch WiFi Module	Yes
Bluetooth	5.0
Optical Out	x1
Headphone	1(3.5mm)
Gyroscope	Yes
Auto-rotate	Yes
WIFI	IEEE 802.11a/b/g/n/ac/ax with 2 × 2 MIMO (hotspot only) (both 2.4 and 5 GHz bands)
WIFI Generation	WIFI 6
WIFI Speed	Capable of speeds up to 1Gbps

Computing

Operating System	Android 11
System Version	LUX 11
RAM	4GB
Internal Storage	32GB
CPU	Quad Core A55
GPU	Mali G52 MP2
Android Resolution	4K
System Architecture	32B

Audio

DualFront Facing, Bass Enhanced Speakers	2 x 16W
SPDIF / Fibre	Yes
Sound Channel	2.0

Power

Power Requirements	43”: 100-240V~ 50/60Hz 2.5A 55”: 100-240V~ 50/60Hz 3.0A 65”: 100-240V~ 50/60Hz 3.5A 75”: 100-240V~ 50/60Hz 4.5A 86”: 100-240V~ 50/60Hz 5.0A 98”: 100-240V~ 50/60Hz 5.5A
Power Consumption (Normal)	43”: 55.72W 55”: 72.24W 65”: 80.29W 75”: 107.54W 86”: 168.3W 98”: 164.22W
Power Consumption (Standby)	≤0.5W
Ultra Quiet Fanless Design	Yes

Operating and Storage Environment

Operating Temperature	0˚ to 40˚
Storage Temperature	-20˚ to 60˚
Operating Humidity	10% to 90% RH
Storage Humidity	10% to 90% RH
Altitude	Below 5000 metres

allOffice | FutureVisuals

CL Pro Series Specifications

Physical Spec

Panel Dimensions	43”: 964.6 x 552.5 x 71.4mm 55”: 1233 x 703.5 x 71.4mm 65”: 1463.3 x 838.3 x 76.4mm 75”: 1685.6 x 963.7 x 81.6mm 86”: 1930.8 x 1101.8 x 81.6mm 98”: 2212.9 x 1268.4 x 79.4mm
Packed Dimensions	43”: 1056 x 156 x 672mm 55”: 1332 x 156 x 819mm 65”: 1628 x 208 x 942mm 75”: 1863 x 225 x 1090mm 98”: 2360 x 280 x 1425mm 86”: 2110 x 225 x 1227mm
Bezel Sizes	43”: 9.9mm 55”: 9.9mm 65”: 15.9mm 75”: 15.9mm 86”: 15.9mm 98”: 25mm
Net Weight	43”: 9.90kg 55”: 13.40kg 65”: 25.4kg 75”: 34.65kg 86”: 43.15kg 98”: 69.90kg
Packed Weight	43”: 13.85kg 55”: 19.50kg 65”: 33.25kg 75”: 48.15kg 86”: 60.75kg 98”: 90.80kg
VESA Mount Point	43”: 200 x 200mm 55”: 400 x 200mm 65”: 600 x 400mm 75”: 800 x 600mm 86”: 800 x 600mm 98”: 800 x 600mm
Screws for VESA	43”: M6 x 12mm 55”: M6 x 12mm 65”: M8 x 25mm 75”: M8 x 25mm 86”: M8 x 25mm 98”: M8 x 25mm

Installation

The installation of this product should be completed by a qualified installer. Use of components not supplied by Clevertouch or not meeting minimum specifications may impact performance, safety and warranty. For more information, visit clevertouch.com

Support

For all Clevertouch products, visit: support.clevertouch.com

Inside your Clevertouch Box

What's In The Box	(1) CL Pro Series Commercial Display (1) Regional Power Cable (1) HDMI Cable (1) Remote Control (1) Batteries for Remote Control (1) Clevertouch WiFi Module (1) Quick Install Guide

Warranty

Warranty term and upgrade options vary by region. Contact your local reseller or distributor for information and visit clevertouch.com/about/warranty

Compliance & Certification

Regulatory Certification	CE, CB, FCC, IC (EMC), SANS 62087, Energy Star, ERP (Ecodesign), EEI

Software & Features

OpenSDK Support	Yes
Intelligent O&M	Yes
H.264 + H.265	Yes
HD Hardware Encoding and Decoding	Yes
CleverLive™ Embedded Digital Signage	Yes
Clevershare™ Mirroring Any Device To The Board	Yes
Miracast (WiFi Direct)	Yes
AirPlay	Yes
Chromecast	Yes
CleverLive Rooms™ Embedded Room Booking	Yes
Alerts and Announcements	Yes
Over-the-Air Updates	Yes
Remote Management Of Touchscreens (MDM)	Yes

Statement

Size andweightvary by configuration and manufacturing process, please refer to the actual product. The product images are for illustrative purposes only and may slightly differ in appearance, colour, size, etc. from the actual product. The description, illustrations, etc. in this document may subject to change in accordance with the latest product specification and performance. Should the above-mentioned change in the document become necessary, the document may be updated without written notice.

© 2024 Clevertouch. All rights reserved. Sahara Presentations Systems PLC. is part of the Boxlight group of companies, and the owner of trademarks in several global jurisdictions including but not limited to Clevertouch, the Clevertouch logo, UX Pro, IMPACT™, IMPACT Plus™, Impact MAX, CleverLive, LUX, Lynx, CleverMessage, Cleverstore and Clevershare. All third-party trademarks (including logos and icons) referenced by Clevertouch remain the property of their respective owners. Unless specifically identified as such, Clevertouch's use of third-party trademarks does not indicate any relationship, sponsorship, or endorsement between Clevertouch and the owners of these trademarks. Applicable Terms and Conditions for warranty and support available at clevertouch.com/about/warranty. All weights and dimensions are approximate. Product specifications are subject to change without notice. Clevertouch.com.

CL Pro Specifications

43"

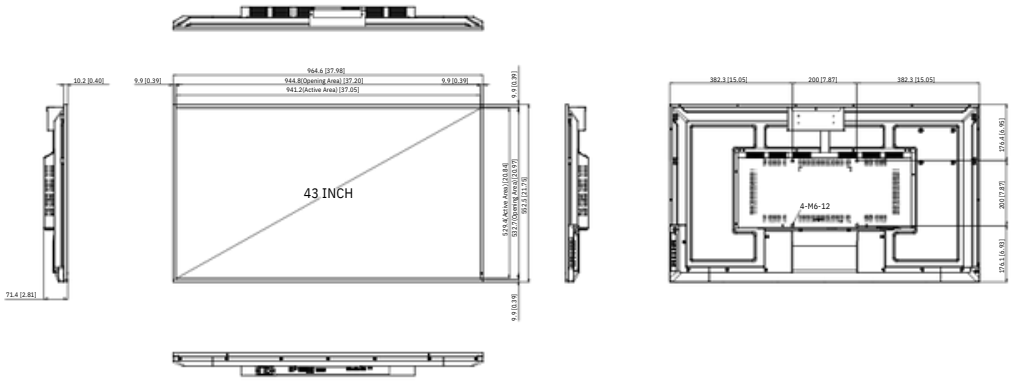

55"

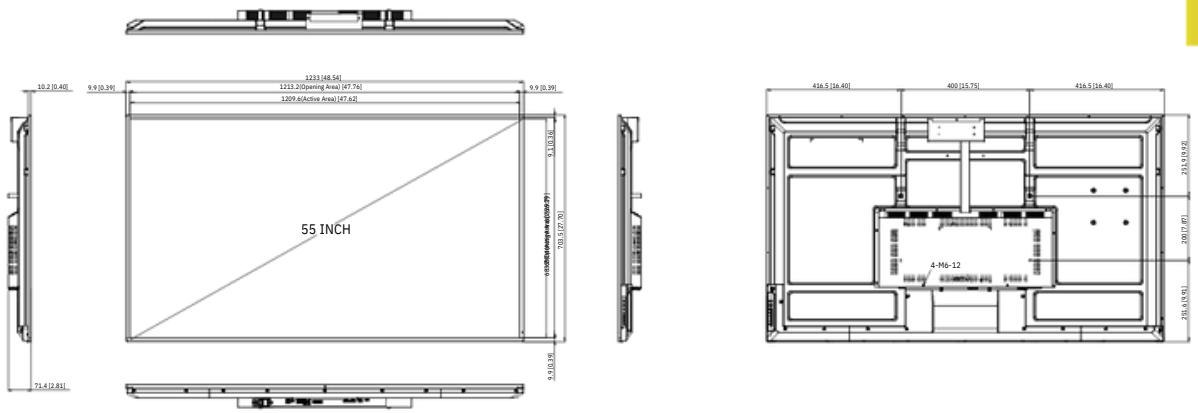

65"

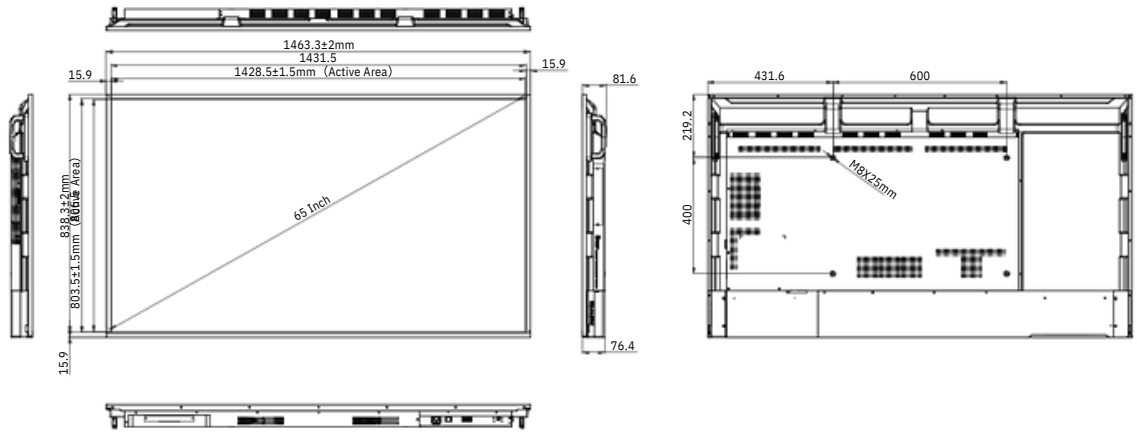

75"

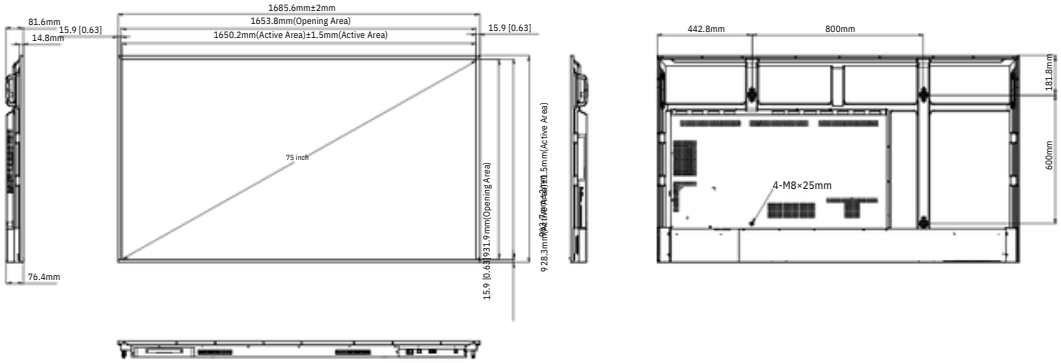

CL Pro Specifications

86"

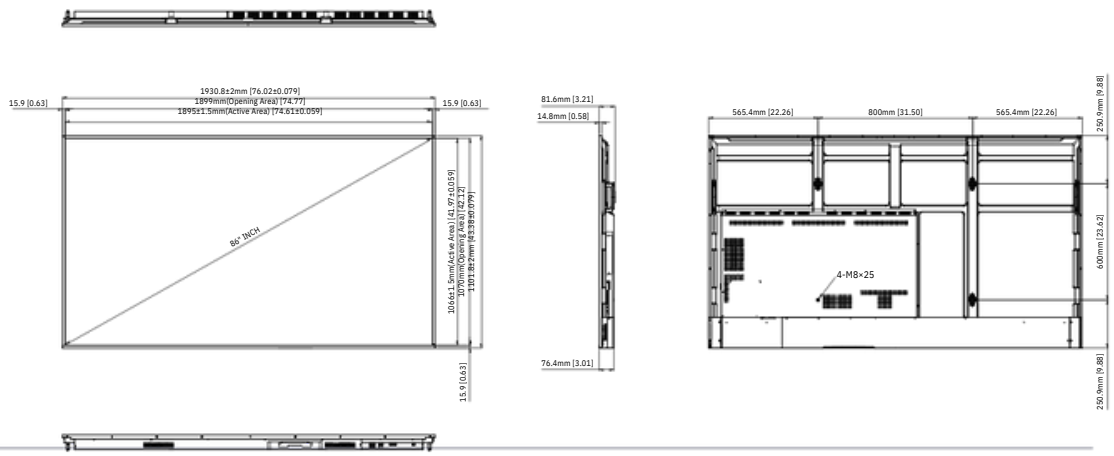
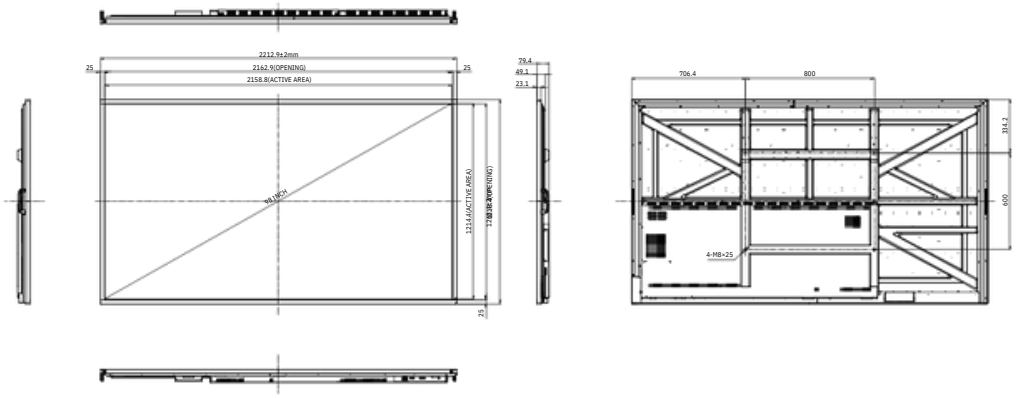
98"